A	B	C	D	E
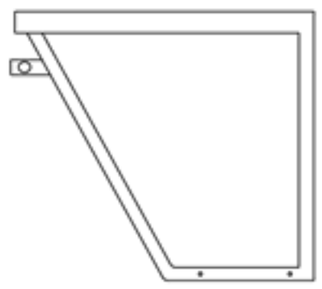	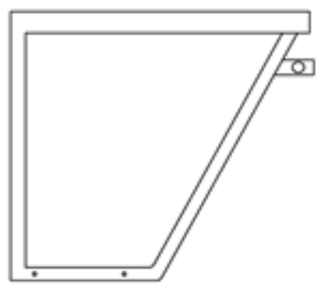	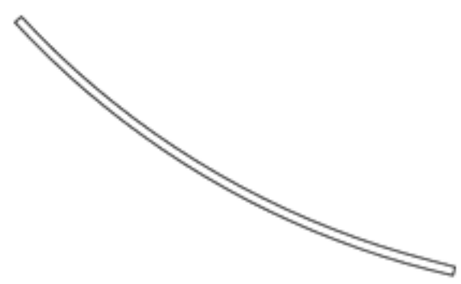	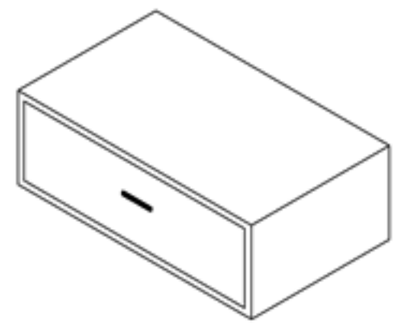	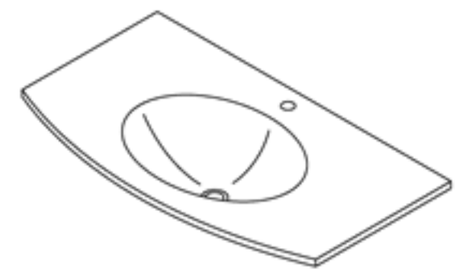
Base Bracket L 1PC	Base Bracket R 1PC	Towel Bar 1PC	Drawer 1PC	Glass Basin 1PC

1	2	3	4	5
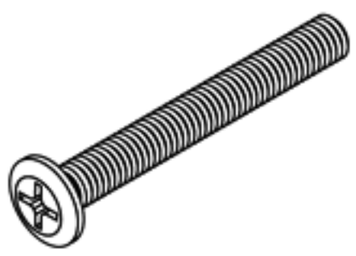	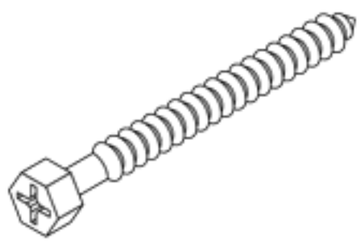		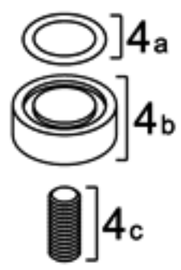	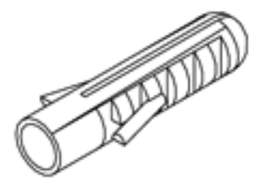
Bolt 4PCS	Wood screw 4PCS	Cover set 4PCS	a: "O"Ring - 4PCS b: Glass Support - 4PCS c: Bolt - 4PCS	Anchors 4PCS

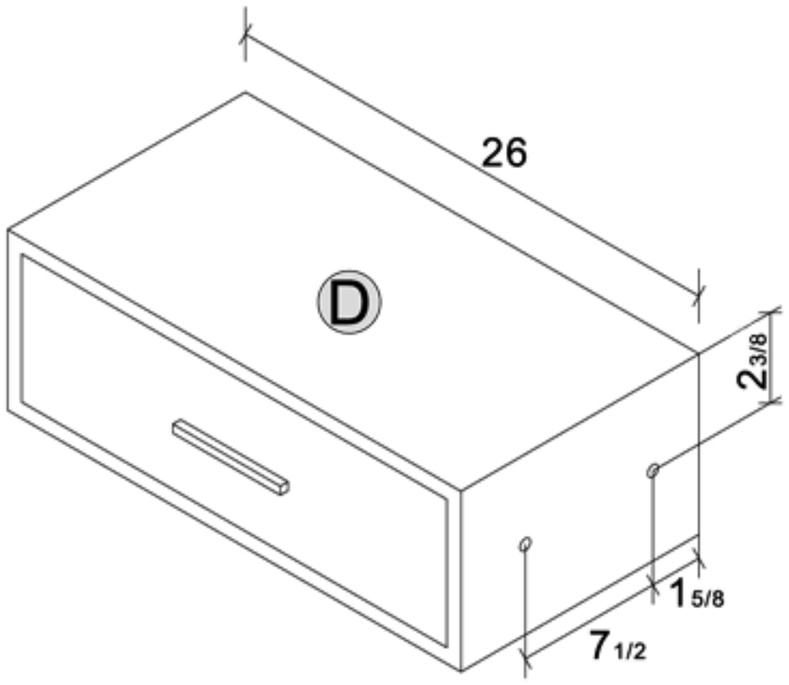

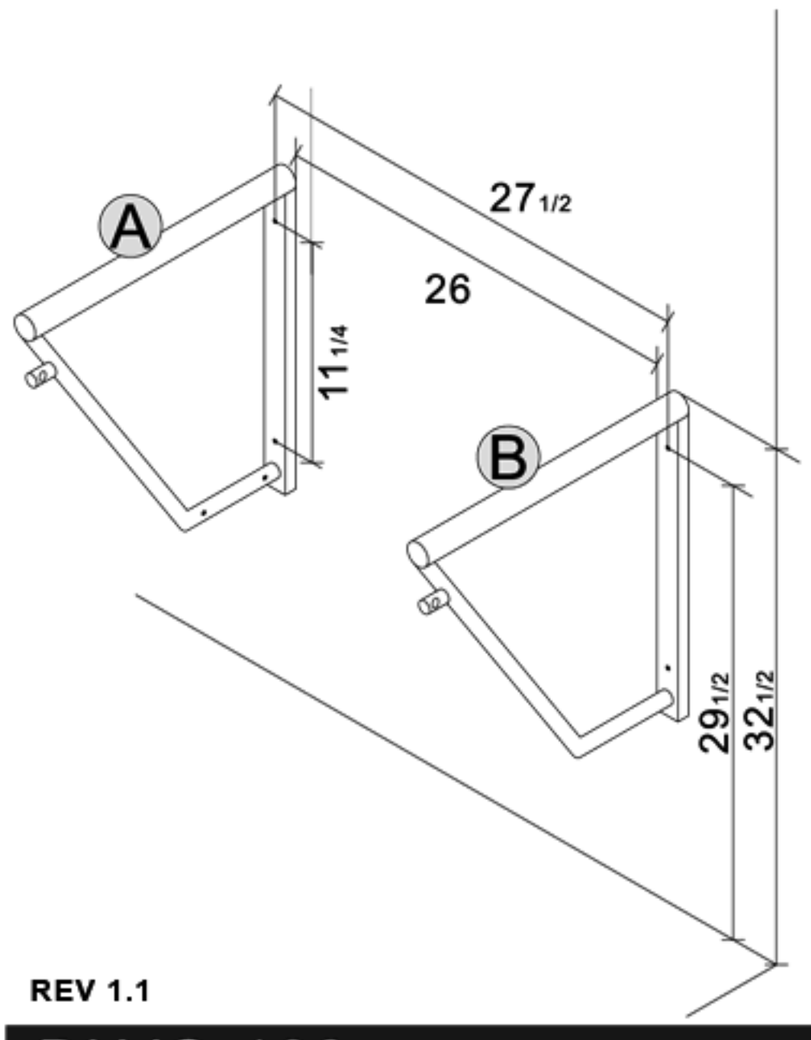

! Need to have at least one stud or wall support !

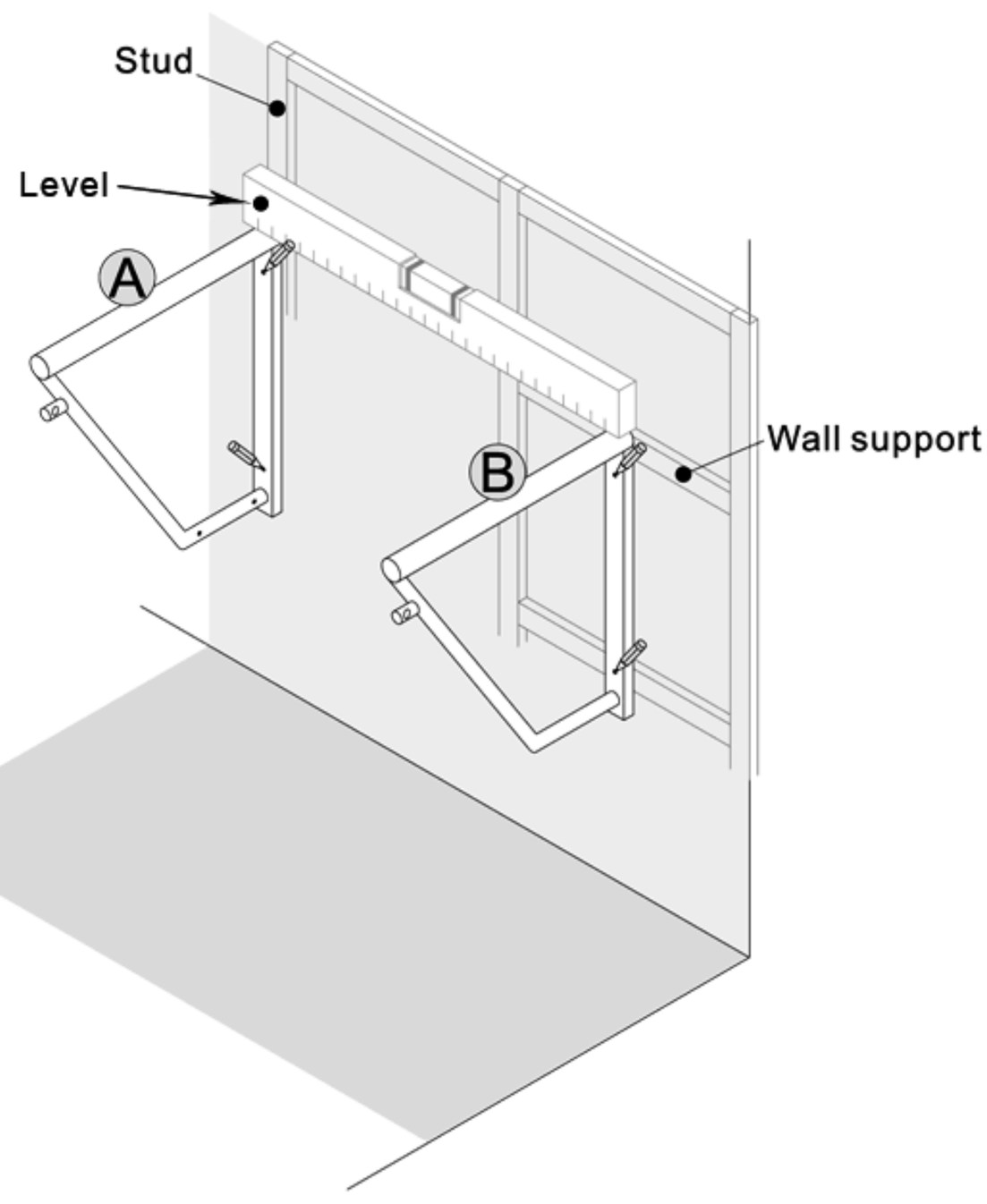

REV 1.1

© 2002-2007 Bath Authority LLC. All Rights Reserved.

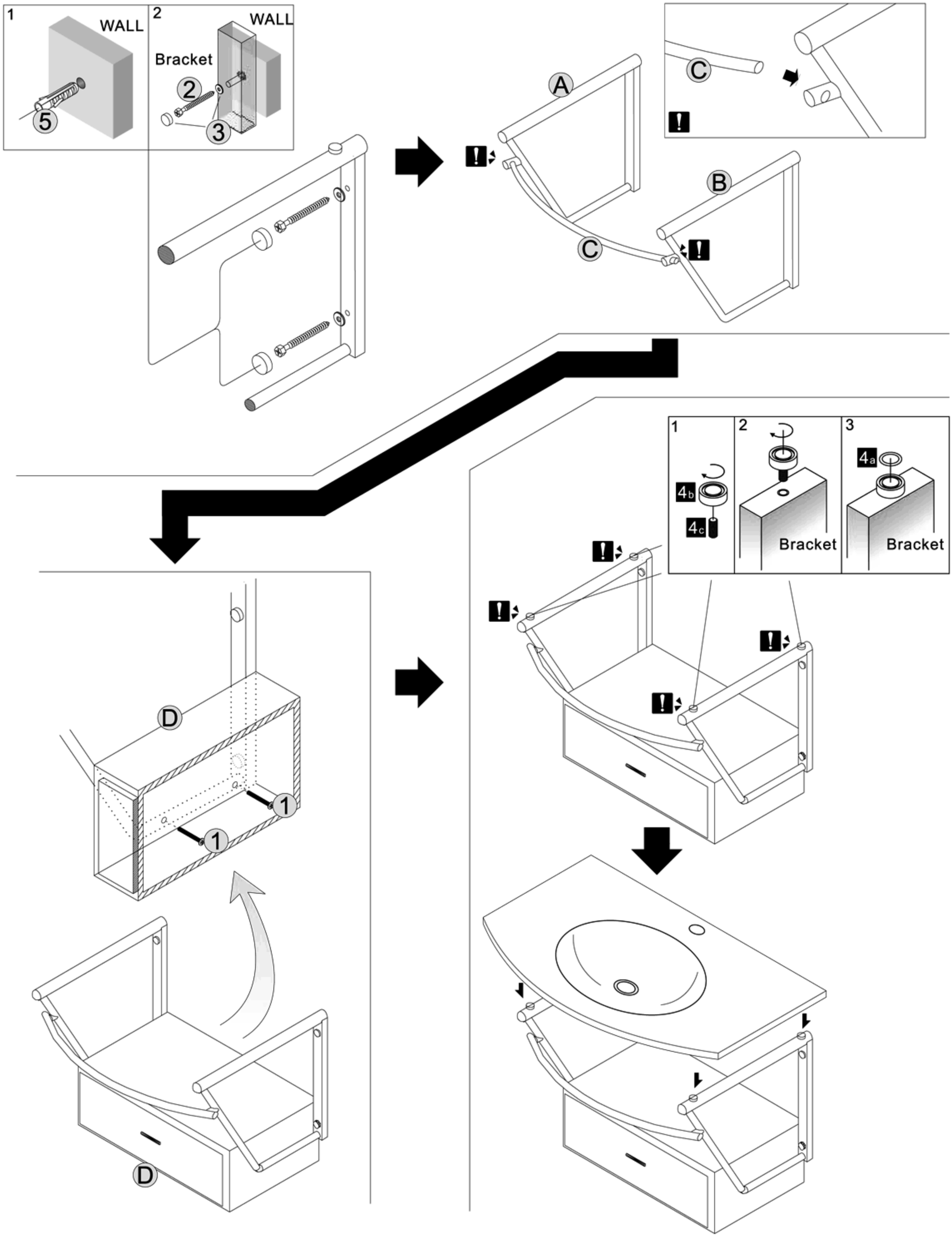

REV 1.1

© 2002-2007 Bath Authority LLC. All Rights Reserved.

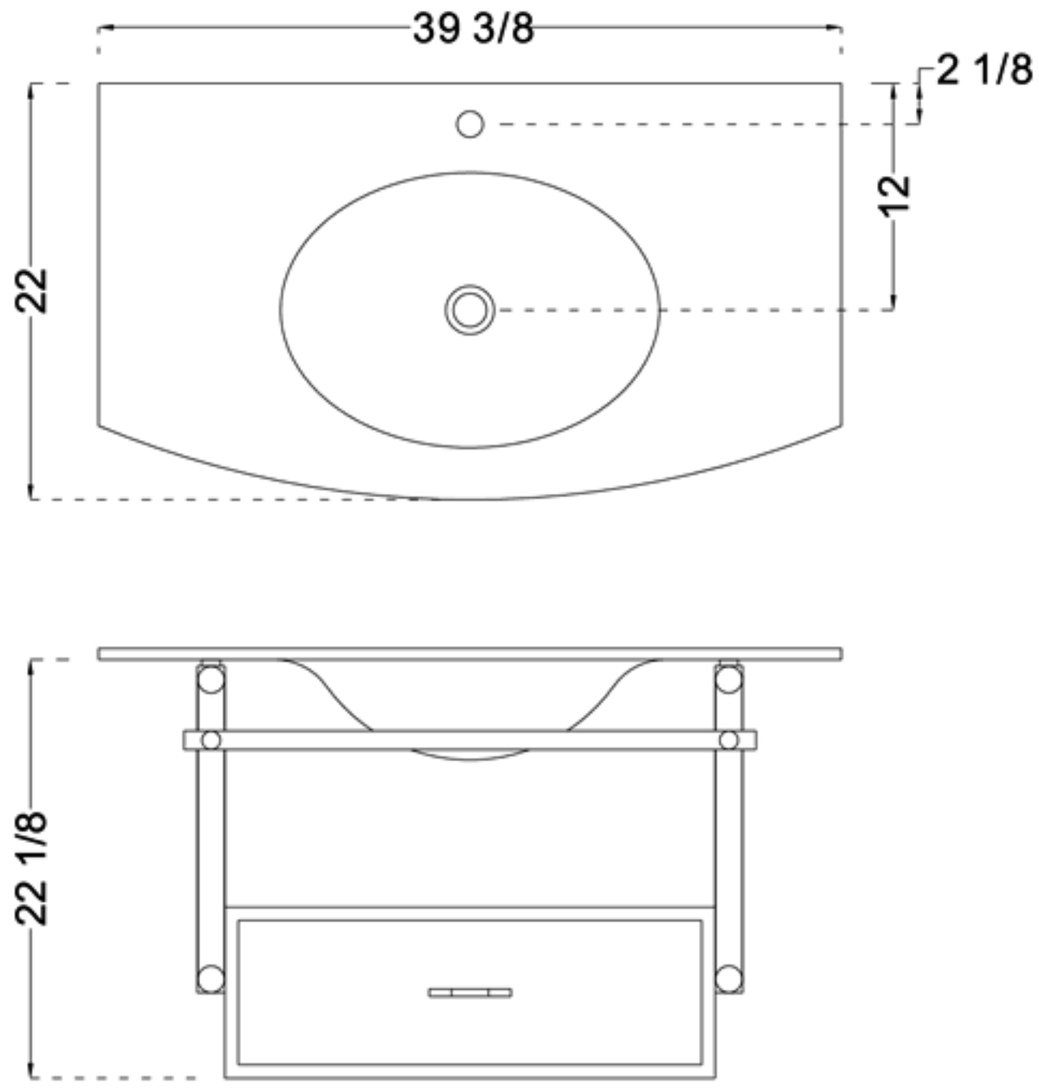

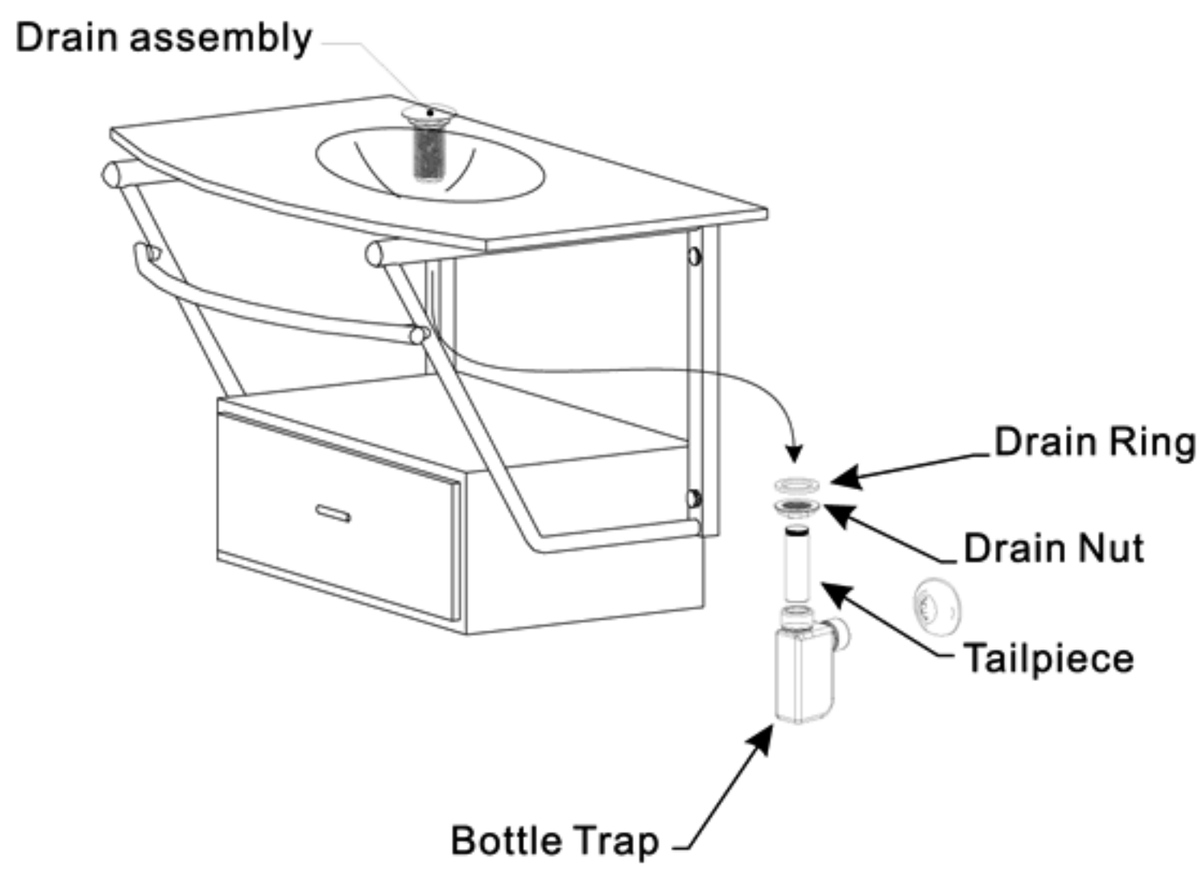

© 2002-2007 Bath Authority LLC. All Rights Reserved.