A	B	C	D
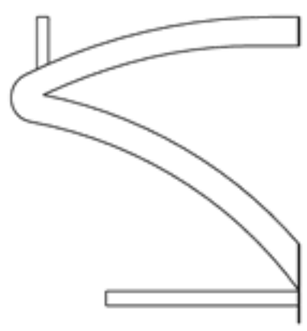	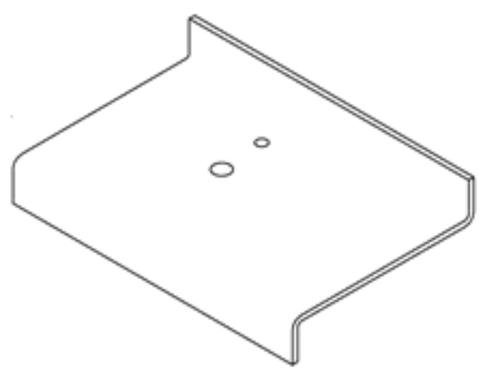	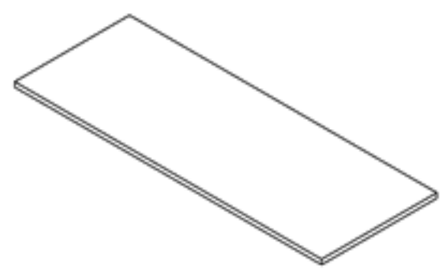	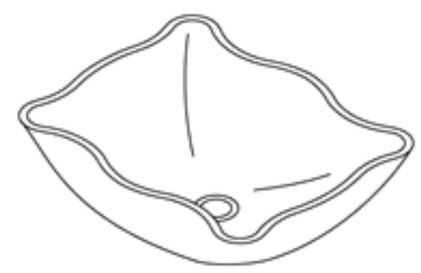 Bowl and mounting ring set are **optional**
Base Bracket 2PCS	Countertop 1PC	Shelf 1PC	Bowl 1PC

1	2	3	5
	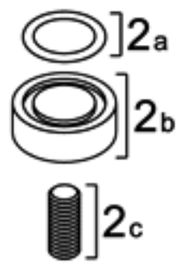 a: "O"Ring - 8PCS b: Glass Support - 8PCS	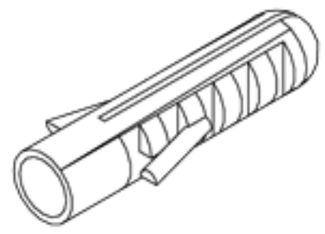	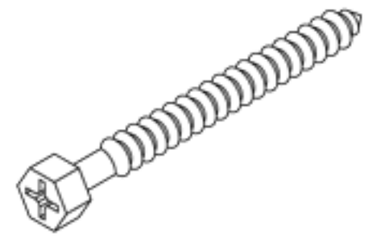
Cover set 6PCS	c: Bolt - 8PCS	Anchors 6PCS	Wood screw 6PCS

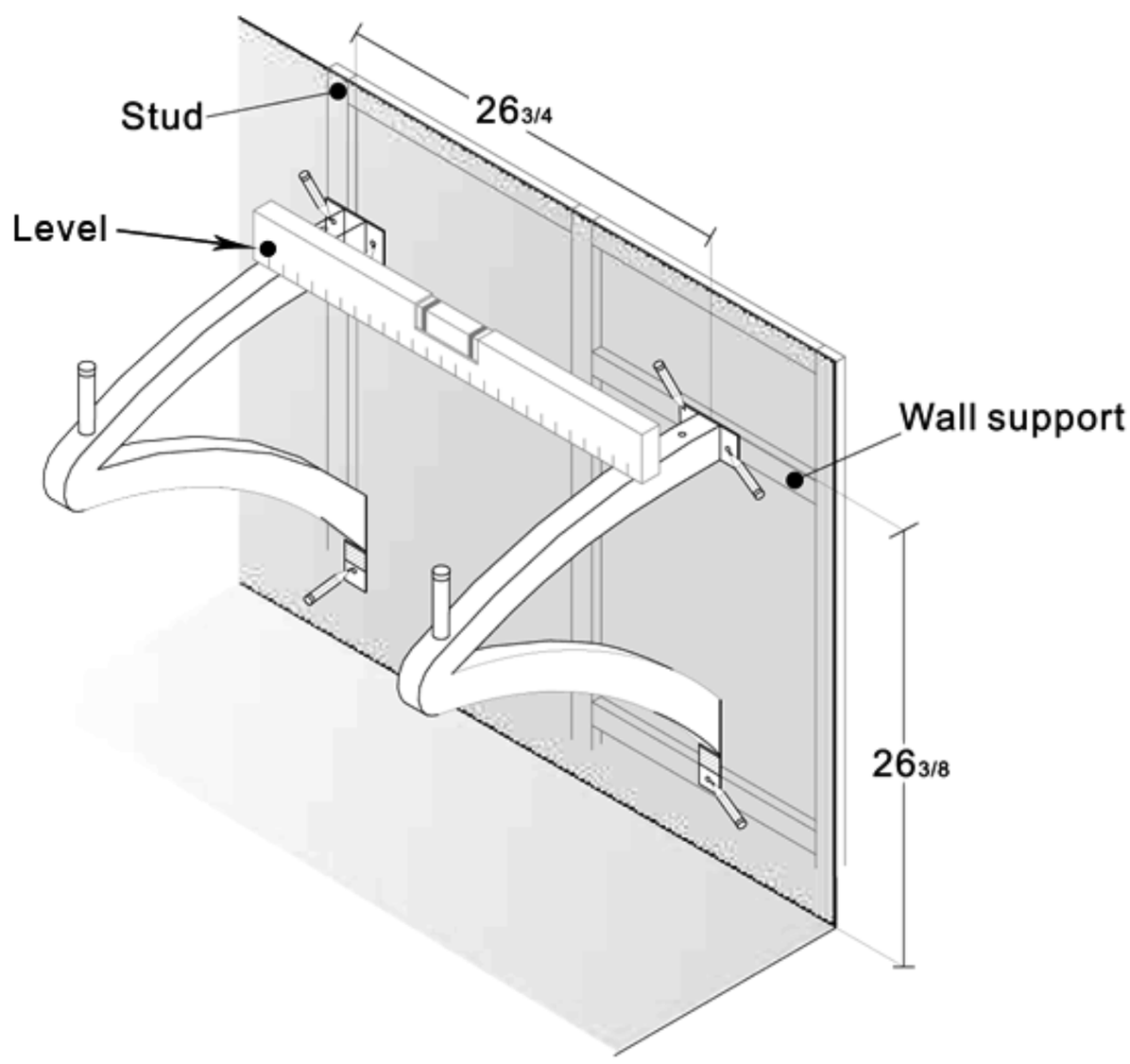

! Need to have at least one stud or wall support !

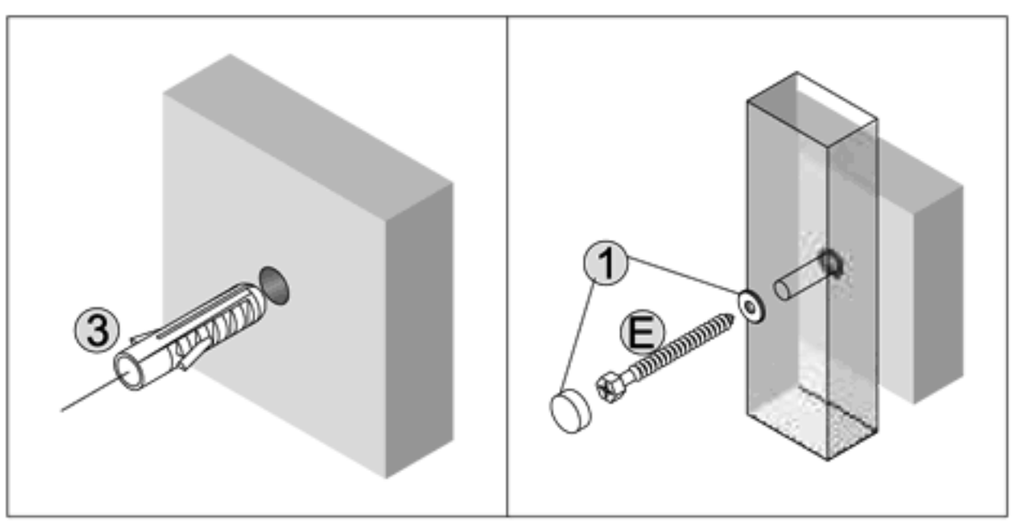

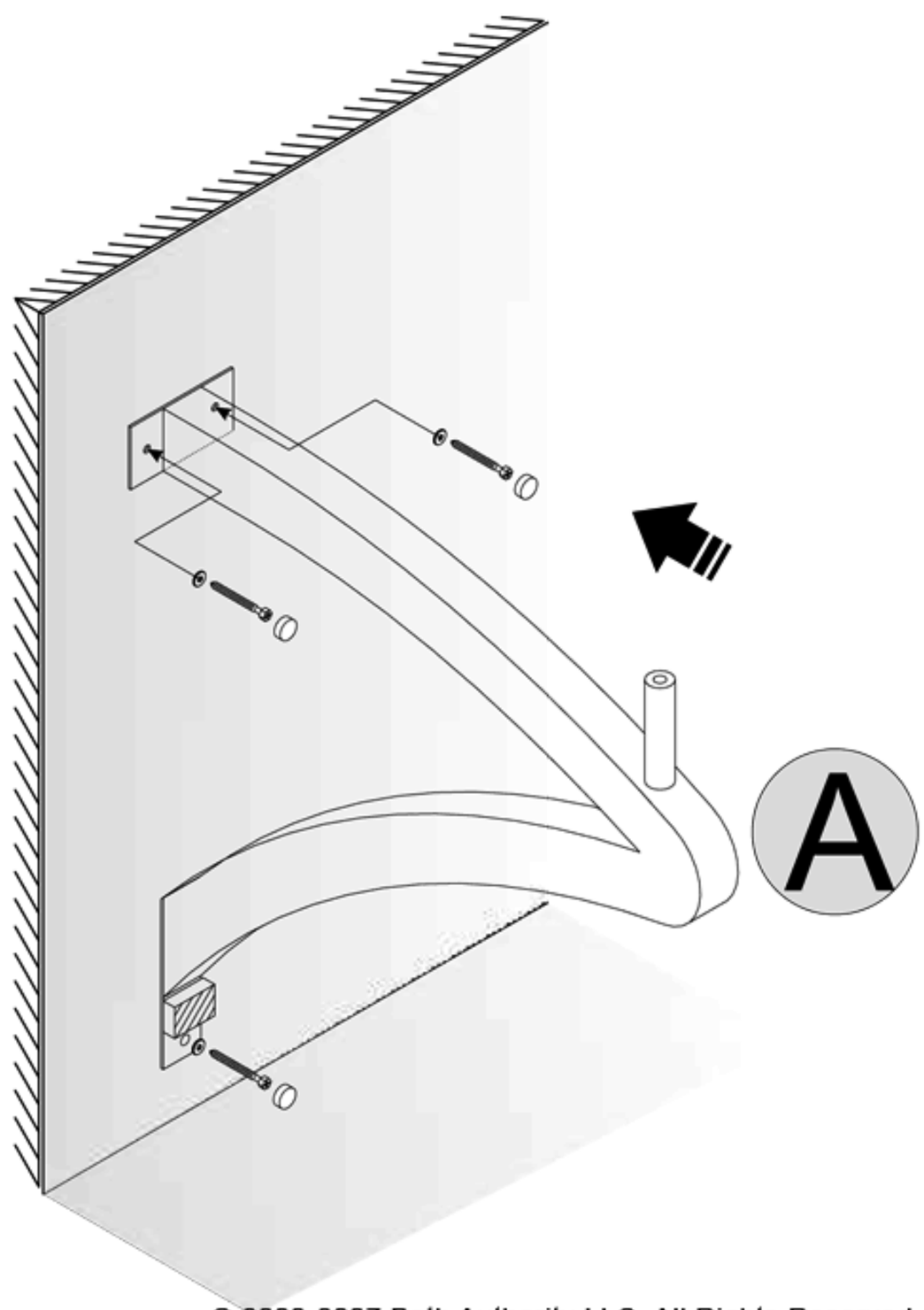

REV 1.1

© 2002-2007 Bath Authority LLC. All Rights Reserved.

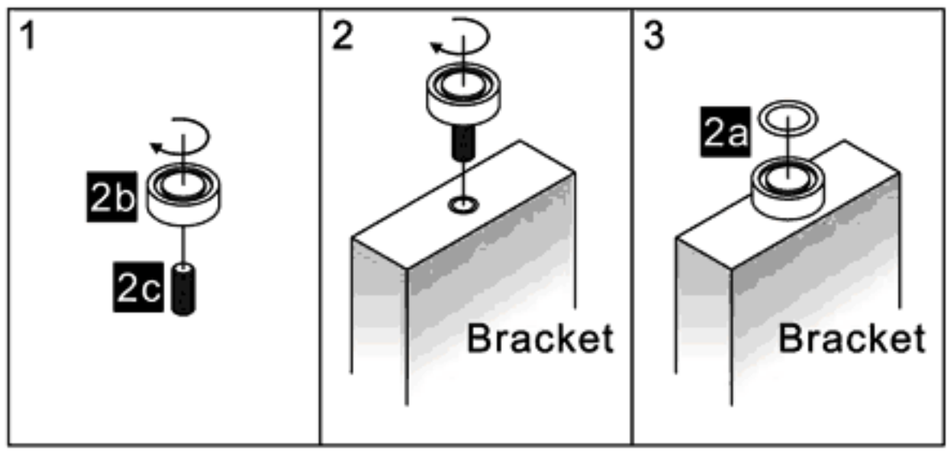

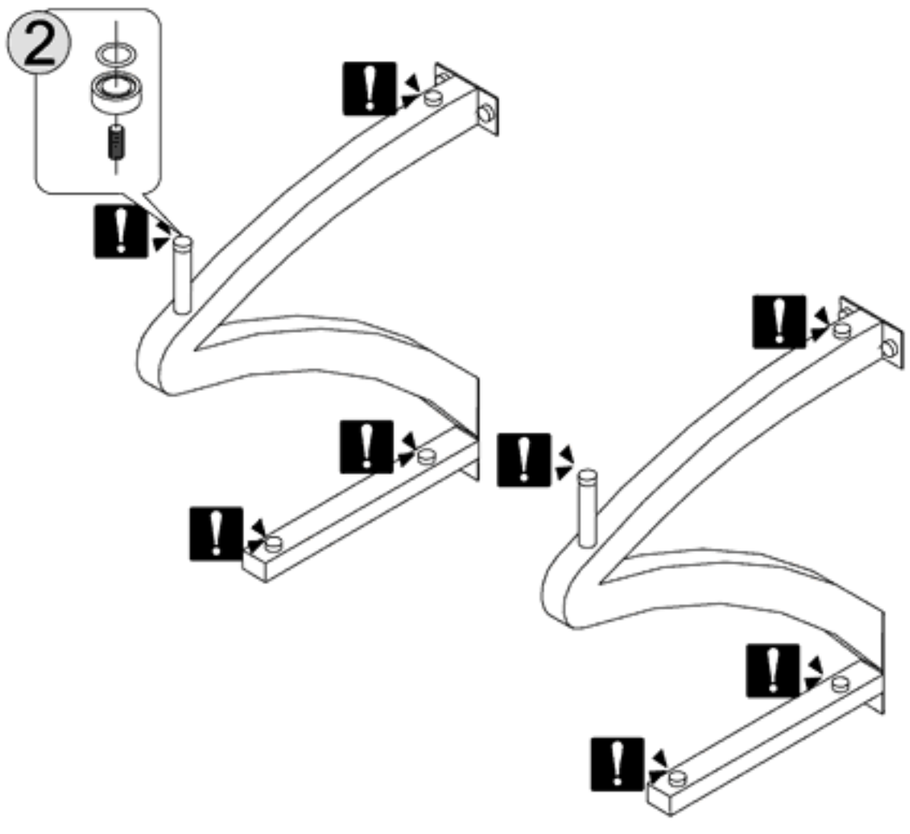

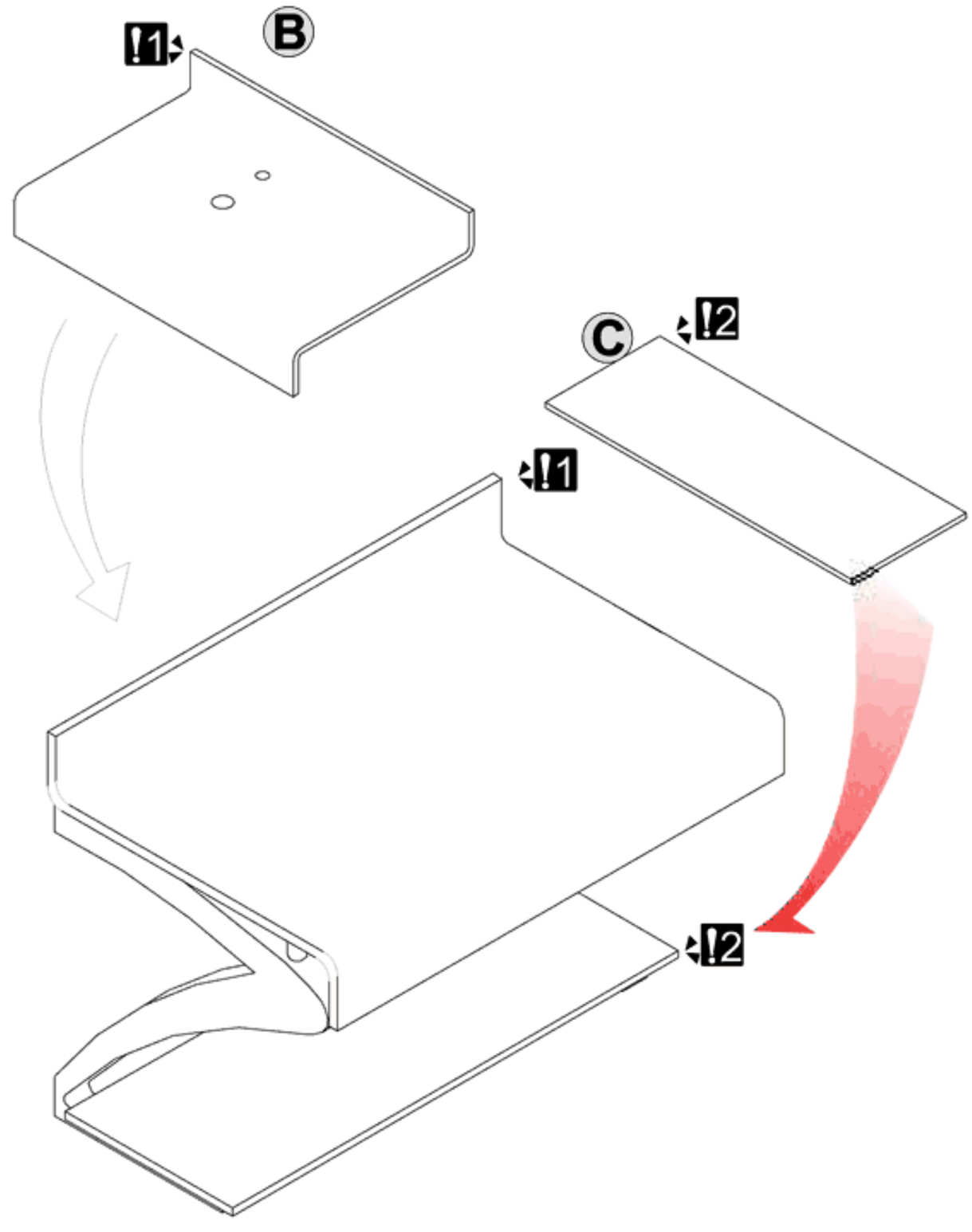

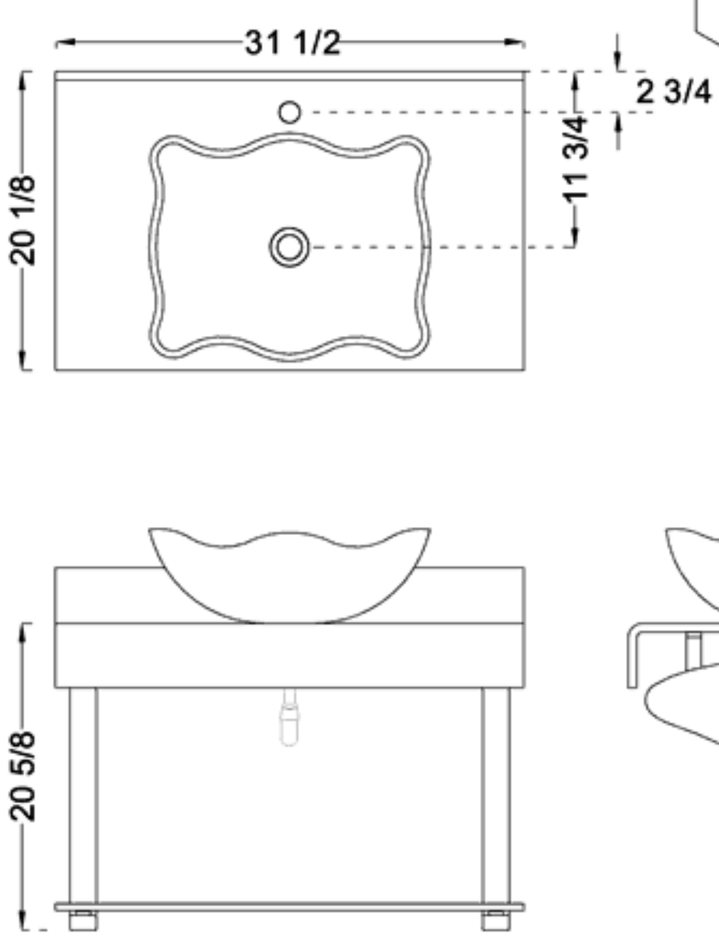

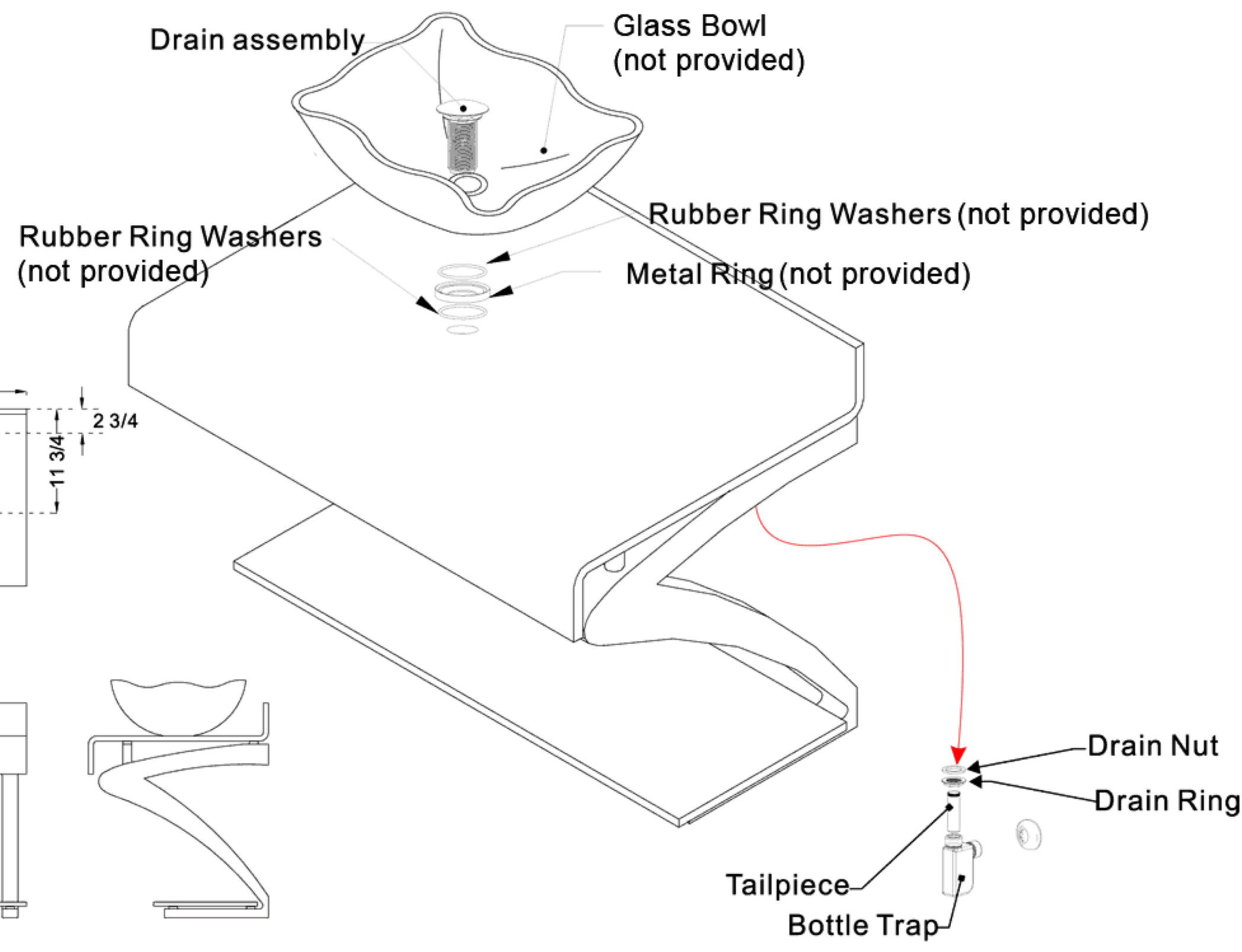

REV 1.1

© 2002-2007 Bath Authority LLC. All Rights Reserved.