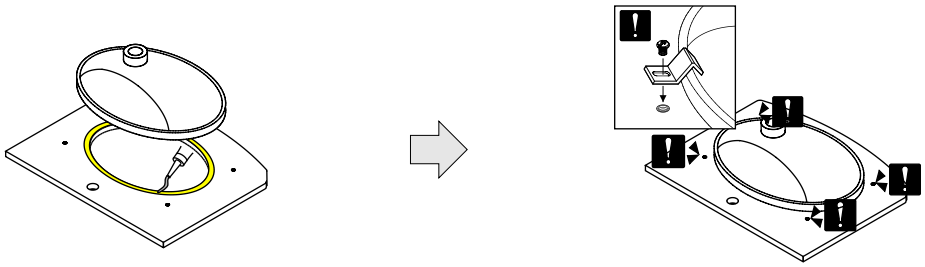

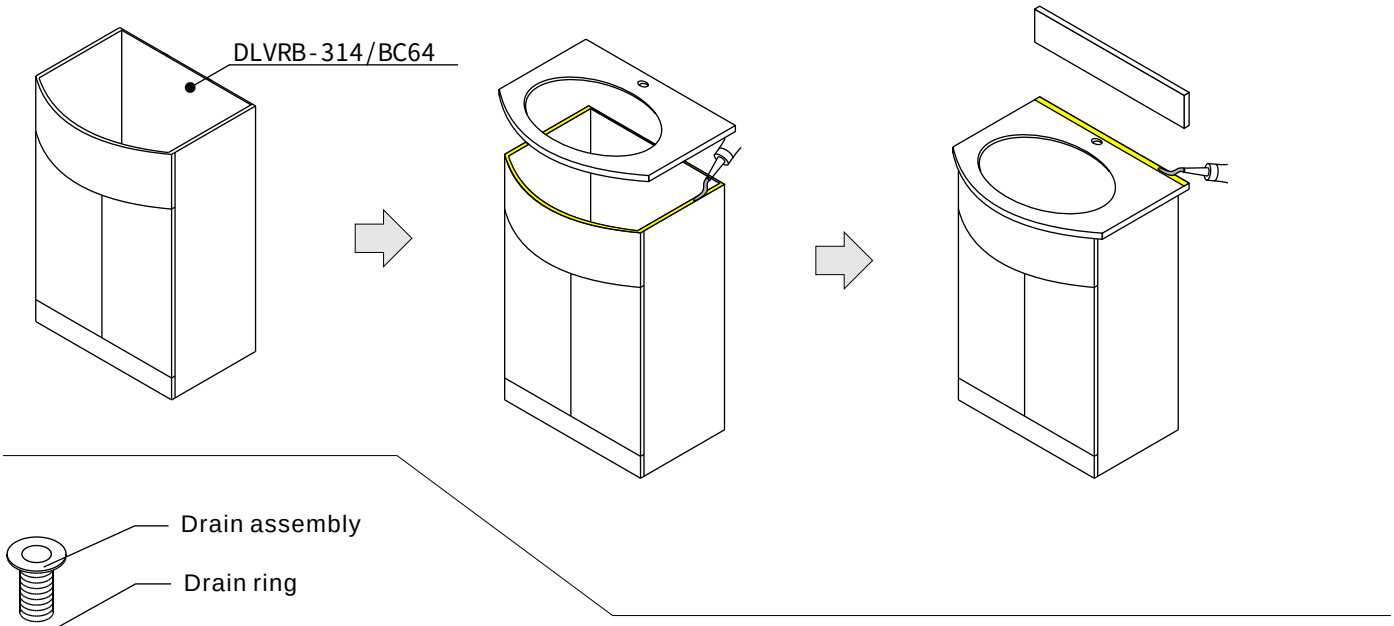
DLVRB-314/BC64

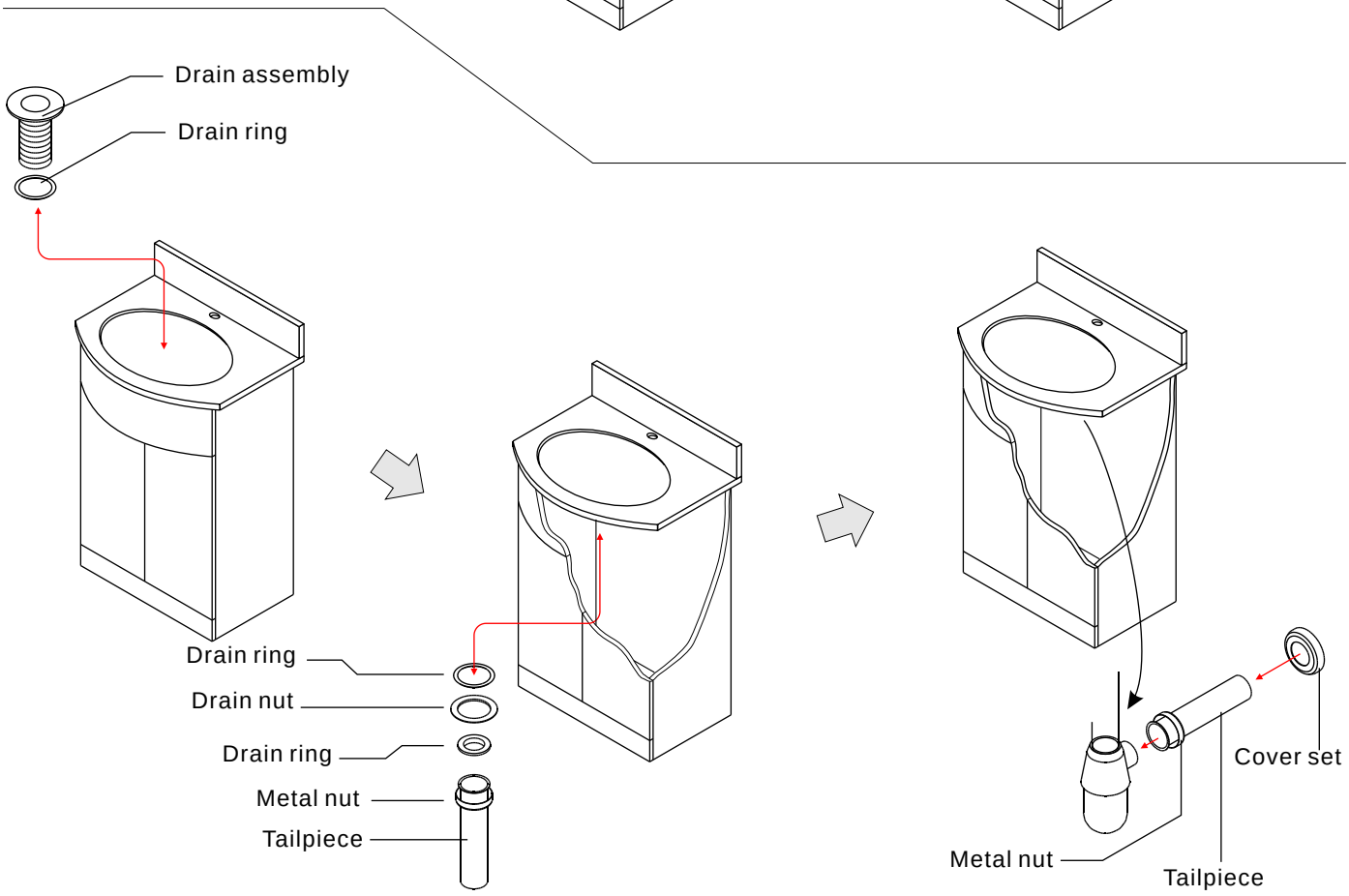
Drain assembly
Drain ring
Drain ring
Drain nut
Drain ring
Metal nut
Tailpiece
Cover set
Metal nut
Tailpiece

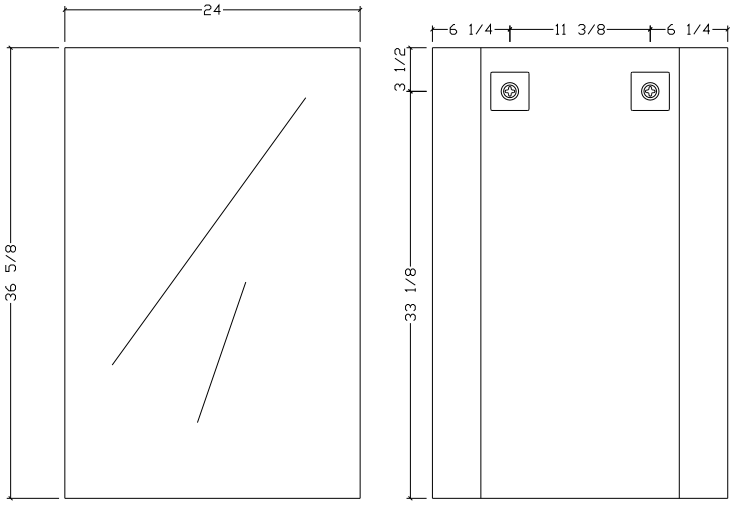
24
36 5/8
6 1/4
11 3/8
6 1/4
3 1/2
33 1/8

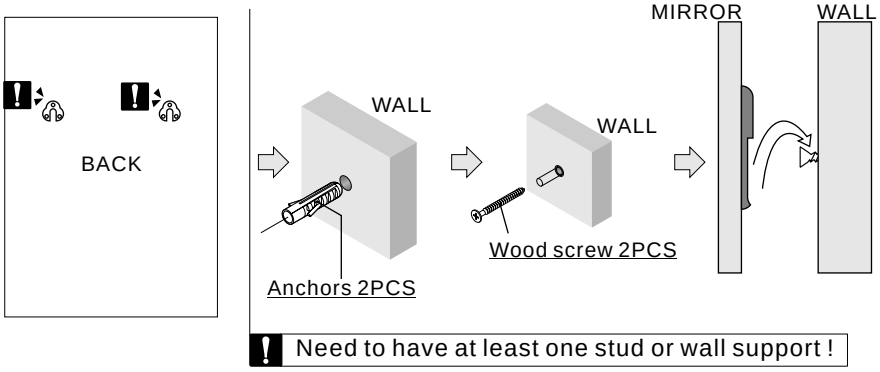
BACK
WALL
Anchors 2PCS
WALL
Wood screw 2PCS
MIRROR
WALL
Need to have at least one stud or wall support !

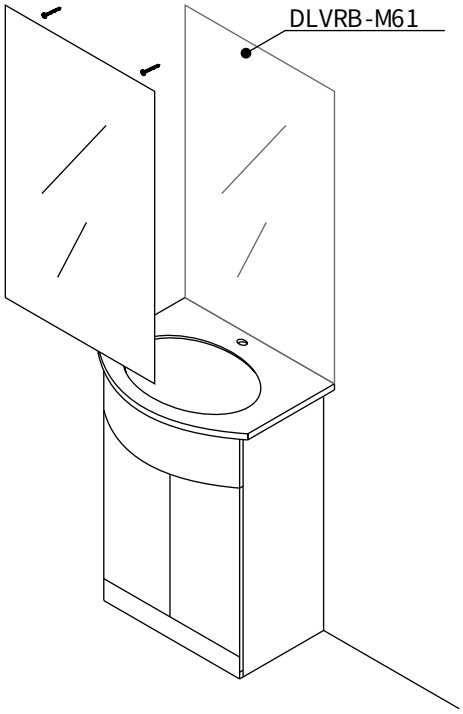
DLVRB-M61

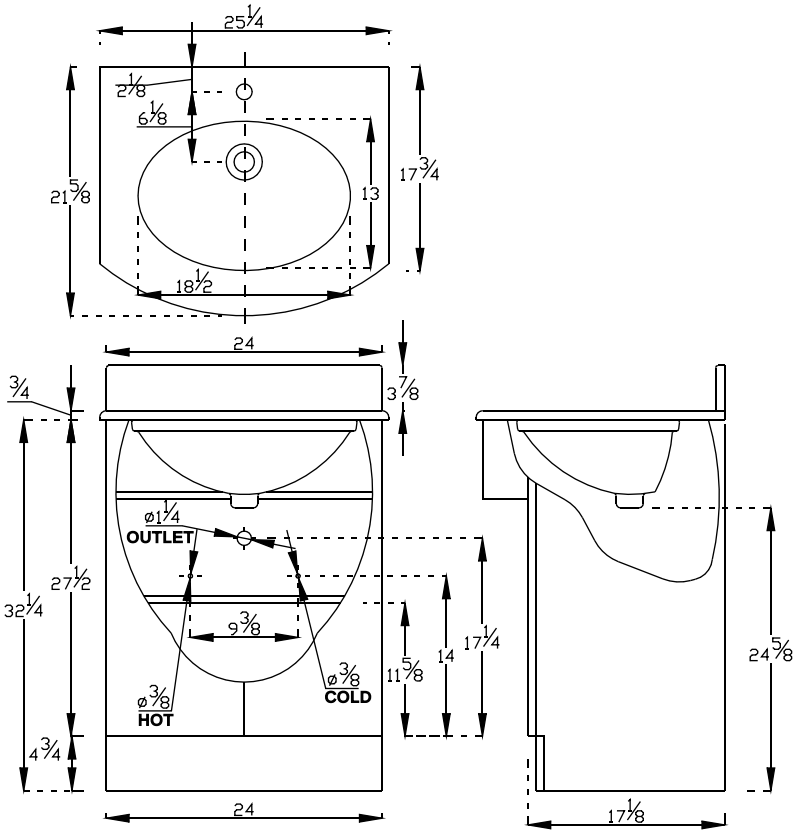
25 1/4
2 1/8
6 1/8
21 5/8
13
17 3/4
18 1/2
24
3/4
3 7/8
ø1 1/4
OUTLET
27 1/2
32 1/4
9 3/8
ø3/8
HOT
ø3/8
COLD
11 5/8
14
17 1/4
4 3/4
24
24 5/8
17 1/8

REV 1.0